LOCUS MAP

NOT TO SCALE

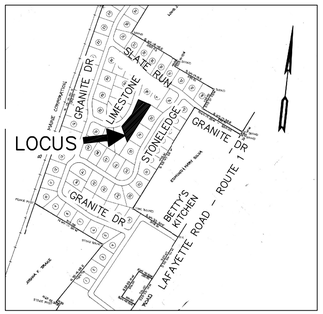

SOIL CLASS: 510 – HOOSIC

(SOURCE: USDA–SCS SOIL SURVEY)

BENCH MARKS: DATUM = ASSUMED

#1 SET PK EL 47.93

#2 SET NAIL ROOT SPRUCE EL 48.44

#3 WATER SHUTOFF EL 46.26

DESIGN INTENT:

1. THE BOTTOM OF THE EFFLUENT DISPOSAL SYSTEM SHALL BE CONSTRUCTED AT ELEVATION 46.3 WHICH IS NO MORE THAN 2.3' BELOW EXISTING GROUND AT THE HIGH CONTOUR THE DESIGNED EDS. (ELEV 48.6)

SUITABLE REPLACEMENT AREA:

MUST BE DETERMINED BY RESUBMITTAL PER ENV–WQ 1003.10

LEGEND:

50 (50) EXISTING CONTOUR
PROPOSED CONTOUR
50.0 EXISTING SPOT ELEVATION
(50.0) PROPOSED SPOT ELEVATION

NOTES:

1. THIS PLAN IS NOT TO BE CONSTRUED AS A BOUNDARY SURVEY. PROPERTY LINES SHOWN ARE APPROXIMATED BASED ON INFORMATION FROM THE FOLLOWING SOURCE:
   RCRD PLAN D10742
2. NHDES–WS&PCD SUBDIVISION APPROVAL NUMBER: 17912
   PREVIOUS CONSTRUCTION APPROVAL #101292
3. THIS SYSTEM IS NOT DESIGNED TO HANDLE GARBAGE DISPOSAL, JACUZZI BATH, OR SEWAGE EJECTOR PUMP WASTE. BACKWASH FROM WATER SOFTENER SYSTEMS SHOULD BE DISCHARGED TO A SEPARATE DRYWELL.
4. a) NO SURFACE WATER WITHIN 75'
   b) NO WELLS WITHIN 75'
   c) NO HYDRIC B SOILS WITHIN 75'
   d) NO HYDRIC A SOILS WITHIN 75'
   OF PROPOSED SYSTEM

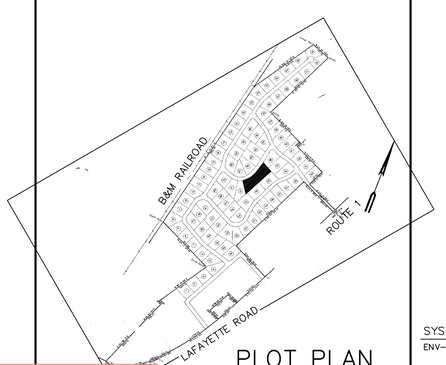

PLOT PLAN

NO SCALE

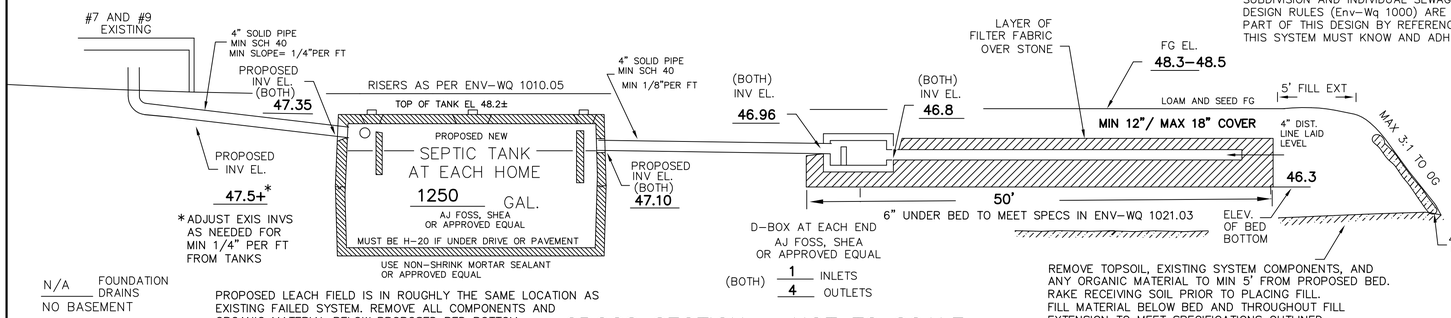

NOTE: INSTALLATION SPECIFICATIONS OUTLINED IN SUBDIVISION AND INDIVIDUAL SEWAGE DISPOSAL SYSTEM DESIGN RULES (Env–Wq 1000) ARE INCLUDED AS PART OF THIS DESIGN BY REFERENCE. ANYONE WHO INSTALLS THIS SYSTEM MUST KNOW AND ADHERE TO THESE RULES.

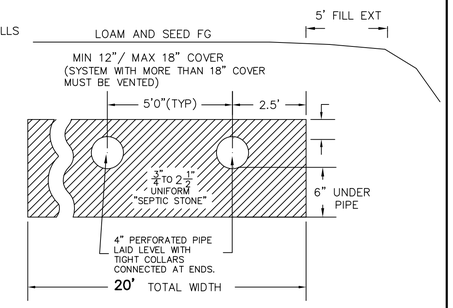

STONE TO MEET SPECIFICATIONS OUTLINED IN ENV WQ 1016.04

CROSS SECTION – NOT TO SCALE

5 DESIGNER MUST BE CONSULTED FOR ANY PROPOSED CHANGES OR ERRORS/DISCREPANCIES FOUND DURING SYSTEM INSTALLATION. (603 929–7404) INSTALLER IS RESPONSIBLE FOR ANY TOWN PERMITS OR INSPECTIONS REQUIRED FOR THIS INSTALLATION.

6. PROPOSED ISDS IS DESIGNED TO SERVICE 1 STRUCTURE WITH DISHWASHER, WASHING MACHINE, TOILETS, AND TUB/SHOWERS. THERE IS NO KNOWN BURIAL SITE OR CEMETERY ON THE LOT OR THE ABUTTING LOT WITHIN 100' OF ANY COMPONENT OF THE ISDS OR WELL

EXISTING SYSTEM FAILURE EVIDENCED BY BACKUPS, FIELD SURCHARGE WHEN TANKS ARE PUMPED.

WATER LINES MUST BE RELOCATED AS NEEDED TO MAINTAIN 25' FROM LEACH FIELD AND 10' FROM SEPTIC TANK. RELOCATE OTHER UNDERGROUND UTILITIES AS NEEDED TO ACCOMODATE NEW SYSTEM COMPONENTS.

PLAN : 1"=20'

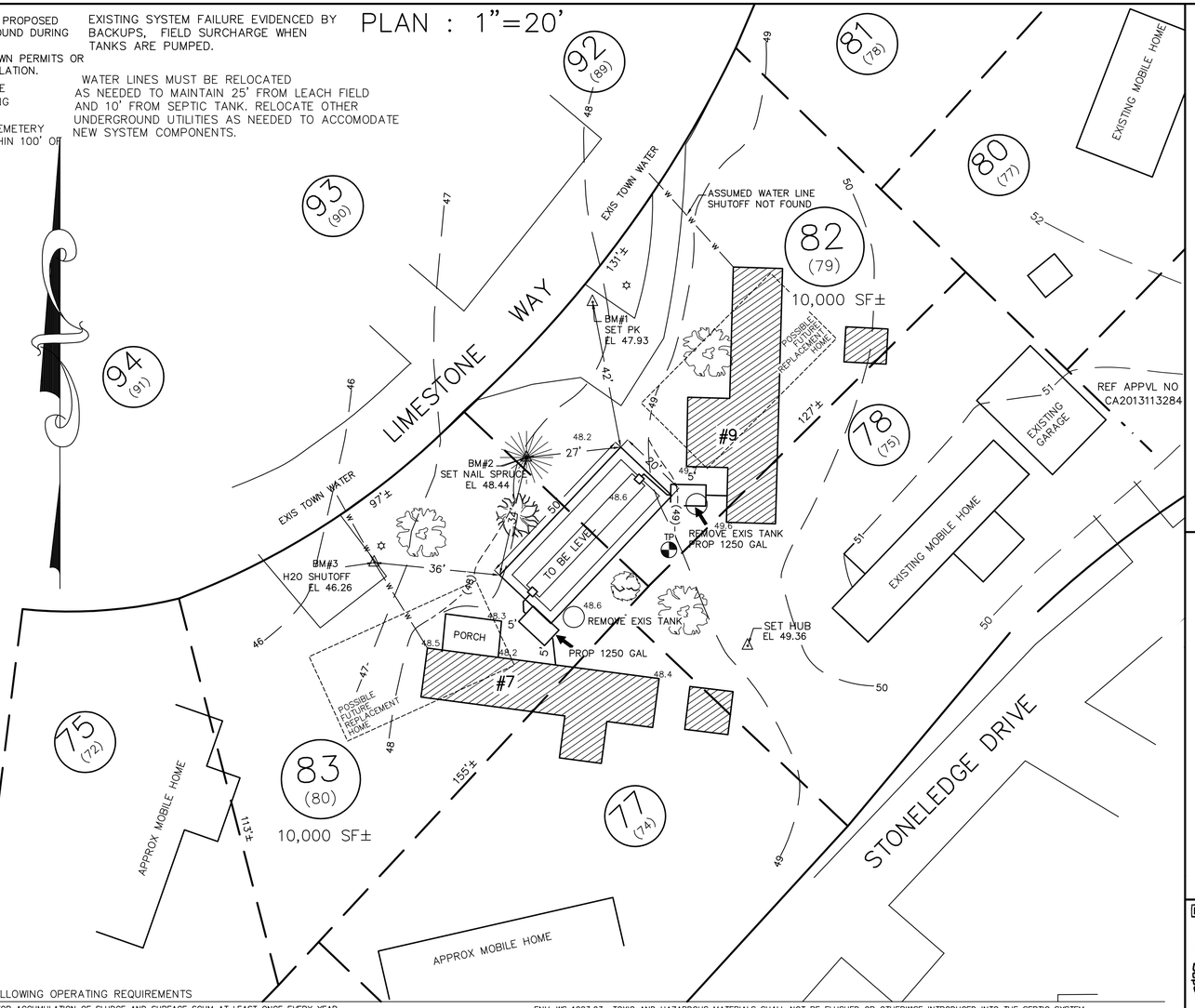

SYSTEM OWNER IS RESPONSIBLE FOR THE FOLLOWING OPERATING REQUIREMENTS

ENV–WS 1023.01 (a) SEPTIC TANKS SHALL BE INSPECTED FOR ACCUMULATION OF SLUDGE AND SURFACE SCUM AT LEAST ONCE EVERY YEAR. (b) WHEN THE COMBINED THICKNESS OF SLUDGE AND SURFACE SCUM EQUAL 1/3 OR MORE OF THE TANK DEPTH, THE TANK SHALL BE PUMPED BY A LICENSED SEPTIC TANK PUMPER.

ENV–WS 1023.02 TO PREVENT OBSTRUCTION OF THE DISTRIBUTION LINES AND LEACH FIELD, GREASE AND BULKY WASTE SHALL NOT BE FLUSHED OR OTHERWISE INTRODUCED INTO THE SEPTIC SYSTEM.

ENV–WS 1023.03 TOXIC AND HAZARDOUS MATERIALS SHALL NOT BE FLUSHED OR OTHERWISE INTRODUCED INTO THE SEPTIC SYSTEM.

ENV–WS 1023.04 TO PREVENT DAMAGE TO THE DISTRIBUTION LINES AND LEACH FIELD, VEHICLES, LIVESTOCK, AND OTHER HEAVY OBJECTS SHALL NOT BE ALLOWED ON THE LEACH FIELD.

ENV–WS 1023.05 IF WET AREAS APPEAR ON THE GROUND SURFACE ABOVE THE DISTRIBUTION LINES OR LEACH FIELD OR IF DISAGREEABLE ODORS OCCUR, THE SYSTEM SHALL BE INSPECTED FOR THE SOURCE OF THESE PROBLEMS, AND CORRECTIVE ACTION SHALL BE TAKEN.

TP TEST PIT DATA

DATE: SEPT 16, 2015

TOWN INSPECTOR: MIKE CUOMO

TEST PIT #1 ELEV 48.9

0 –9 "	10YR3/2 GRAVELLY FINE SANDY LOAM FRIABLE GRANULAR
9–20"	10YR4/4 GRAVELLY LOAMY SAND FRIABLE GRANULAR
20–44"	2.5Y4/3 GRAVELLY SAND LOOSE, SINGLE GRAIN
44–72"	2.5Y5/4 SAND LOOSE, SINGLE GRAIN

NO EVIDENCE OF SHWT TO 72"
NO OBSERVED WATER, NO REFUSAL
ROOTS TO 4'+

PT PERC TEST DATA

PERC RATE: 2 MIN/IN

DESIGN LOADING: TOTAL 4 BEDROOMS

AREA REQUIRED: 750 SF REQUIRED

AREA PROPOSED: 20' X 50' = 1000 SF PROVIDED

PROPOSED REPLACEMENT

SEPTIC SYSTEM PLAN

EXISTING FAILED SYSTEM

LOCUS: #7 AND #9 LIMESTONE WAY
GRANITE POST GREEN (/F PINE ACRES)
TAX MAP 17 LOT 82 (SITES 82 & 83)
NORTH HAMPTON, NH

OWNER: LUCK ENTERPRISES, INC.
PO BOX 700
NORTH HAMPTON, NH 03862–0700

APPLICANT:
STOCKTON SERVICES
PO BOX 1306
HAMPTON, NH 03843–1306
603 929–7404

NEW HAMPSHIRE Designer of Subsurface Disposal Systems ★★★ Anne W. Bialobrzeski No. 348 Department of Environmental Services

DATE: SEPTEMBER 28, 2015

APPROVAL:

732 (SITES 82&83)

APPROVED 30 September 2015
Town of North Hampton *Michael Cuomo*
Septic System Examiner
Notice: North Hampton requires a basal area (scarification) inspection.
Call CEO 24 hours in advance at 964-8650.

REVIEWED AND APPROVED
IN ACCORDANCE WITH THE
REQUIREMENTS OF THE
DEPT OF ENVIRONMENTAL SERVICES
WATER DIVISION